PAC8 SYSTEM WIRING DIAGRAM

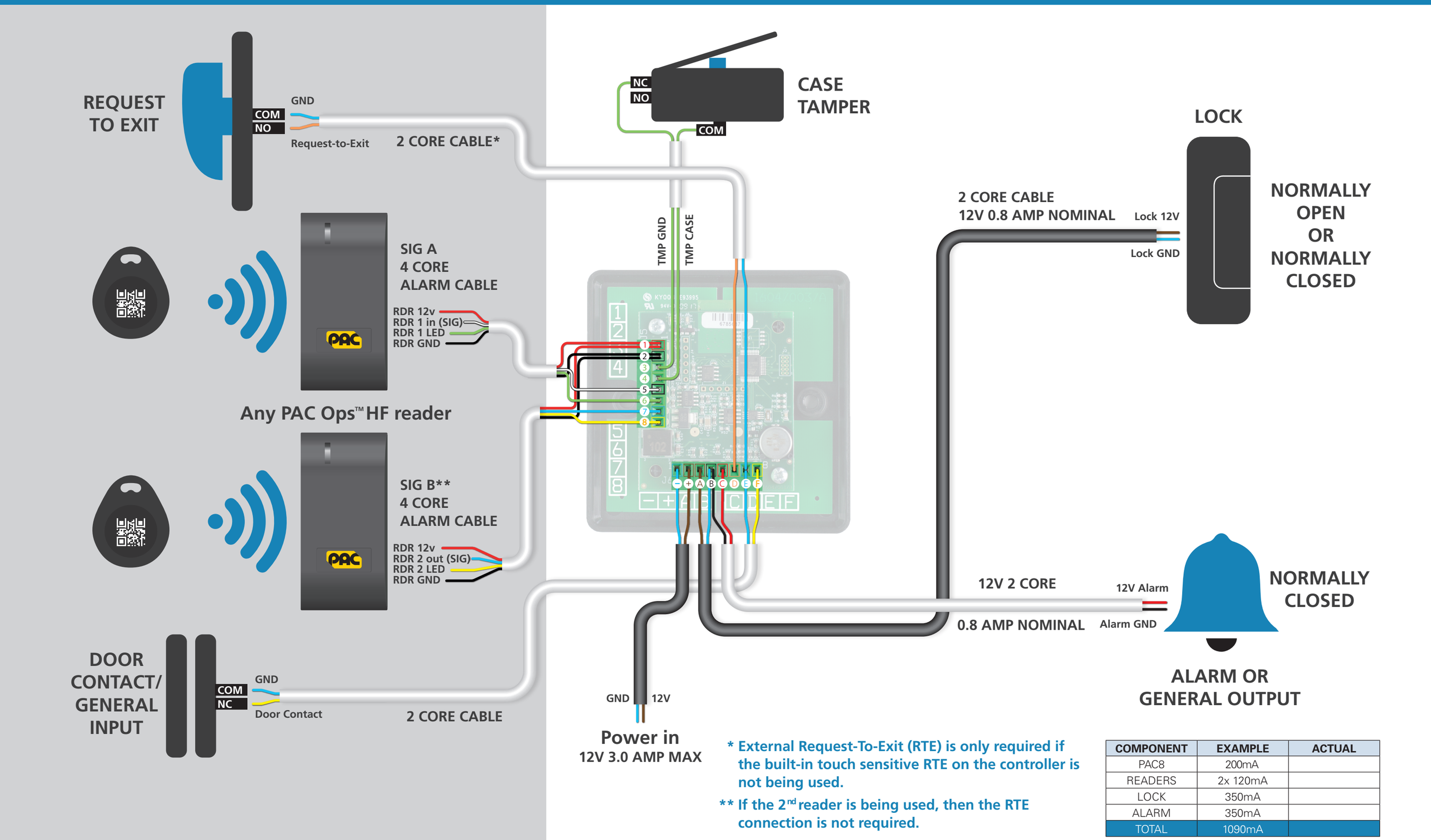

* External Request-To-Exit (RTE) is only required if the built-in touch sensitive RTE on the controller is not being used.

** If the 2nd reader is being used, then the RTE connection is not required.

COMPONENT	EXAMPLE	ACTUAL
PAC8	200mA	
READERS	2x 120mA	
LOCK	350mA	
ALARM	350mA	
TOTAL	1090mA	